# LINEAR POTENTIOMETER

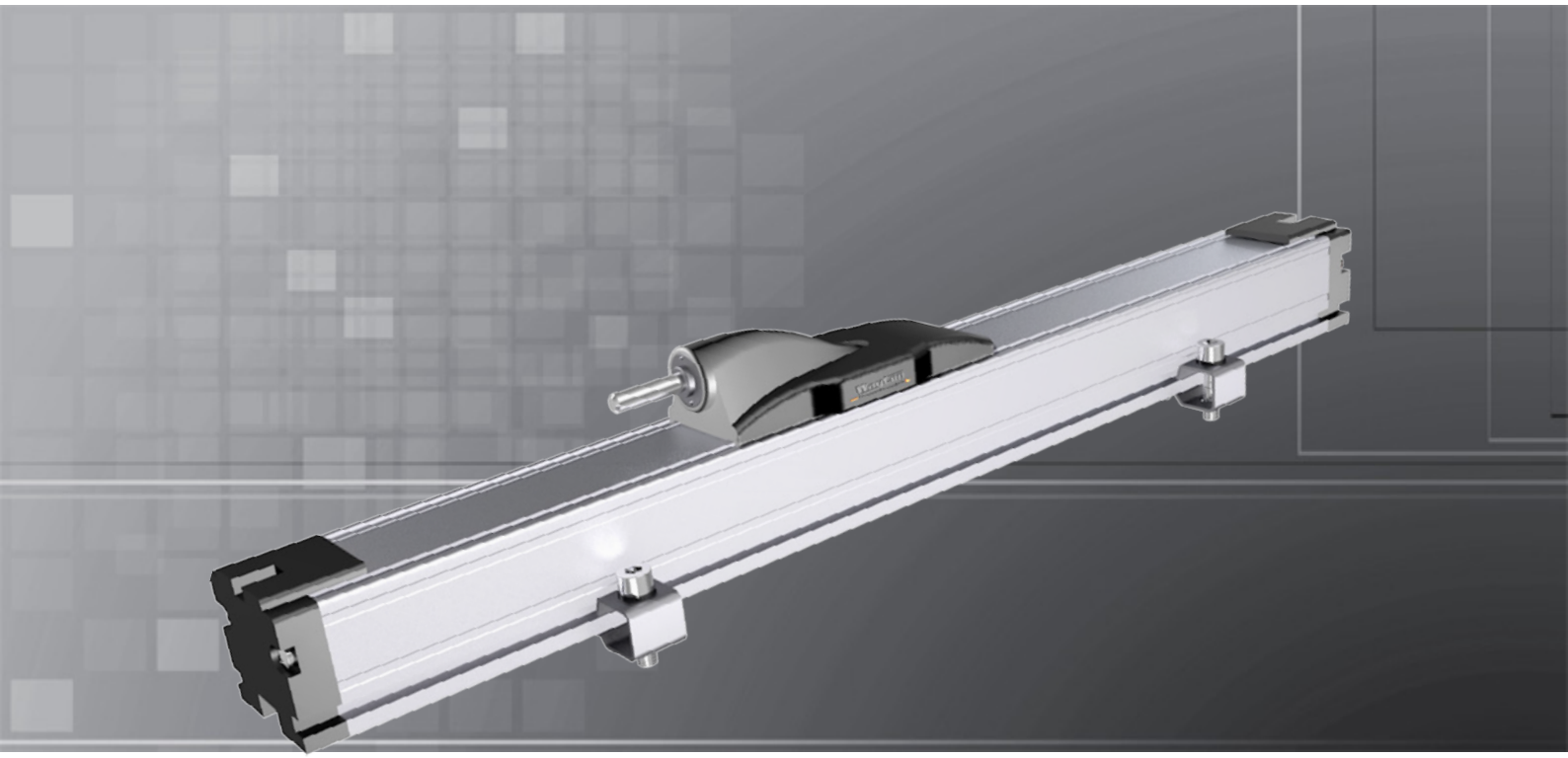

*Content:*


*Technical Data ....2*
*Electrical Connection ....2*
*Technical Drawing ....3*
*Accessories ....3*
*Order Code ....4*


## *Series LSW*

*Key-Features:*

- *Rodless rectangular housing with slide (M5 thread)*
- *Measurement ranges from 100 to 2000 mm*
- *Linearity ±0.05 %*
- *Displacement speed up to 10 m/s*
- *Working temperature -30...+100 °C*
- *Life cycle >25 x $10^6$ meter or 100 x $10^6$ operations, whichever is less*
- *Simple apparatus according to the EN 60079-11 standard*

Photos non contractuelles - Les spécifications peuvent être modifiées sans préavis - wimesure.fr • MB 2021

## TECHNICAL DATA

| | | |
|---|---|---|
| Measurement range MR | [mm] | 100 / 130 / 150 / 175 / 200 / 225 / 250 / 300 / 400 / 450 / 500 / 600 / 750 / 900 / 1000 / 1250 / 1500 / 1750 / 2000 |
| Linearity | [%] | ±0.05 |
| Repeatability | [mm] | 0.01 |
| Resolution | | theoretical infinite, depends on the signal quality of the reference respectively supply voltage |
| Displacement force | [N] | ≤1.2 |
| Displacement speed | [m/s] | ≤10 |
| Acceleration max. | | 200 m/s² (20 g) |
| Resistance | | MR ≤300 mm: 5 kΩ \| MR 400...1000 mm: 10 kΩ \| MR ≥1250 mm: 20 kΩ |
| Tolerance on resistance | [%] | ±20 |
| Dissipation at 40 °C (0 W at 120 °C) | [W] | 3 |
| Applicable voltage max. | [V] | 60 |
| Recommended cursor current | [µA] | <0.1 |
| Cursor current max. | [mA] | 10 |
| Electrical isolation | | >100 MΩ at 500 VDC, 2 s, 1 bar |
| Dielectric strength | | <100 µA at 500 VAC, 50 Hz, 2 s, 1 bar |
| Protection class | | IP40 |
| Operating temperature | [°C] | -30...+100 |
| Storage temperature | [°C] | -50...+120 |
| Temperature coefficient resistance | [ppm/°C] | ±200 |
| Temperature coefficient output voltage | [ppm/°C] | ≤5 |
| Vibration resistance | | 5...2000 Hz, $A_{max}$ = 0.75 mm, $a_{max}$ = 20 g |
| Shock resistance | | 50 g, 11 ms |
| Connection | | connector DIN43650, 4 pin or connector DIN43322, 5 pin |
| Housing | | anodised aluminium, Nylon 66 G 25 |
| Mounting | | brackets or groove |

## ELECTRICAL CONNECTION

**LSW-M**

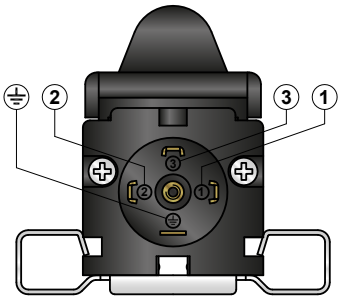


**LSW-B**

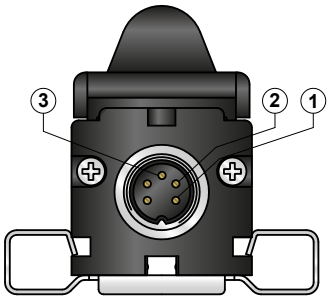


**Circuit diagram**

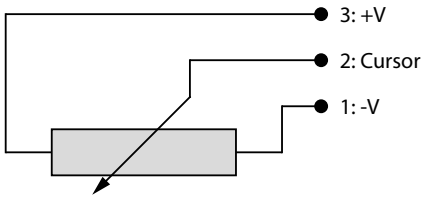


**Installation notes:**

- Do **NOT** use the sensor as a variable resistor!
- While calibrating the sensor set the stroke so that the output signal does not drop below 1 % or exceed 99 % of the supply voltage.

Photos non contractuelles - Les spécifications peuvent être modifiées sans préavis - wimesure.fr • MB 2021

## TECHNICAL DRAWING

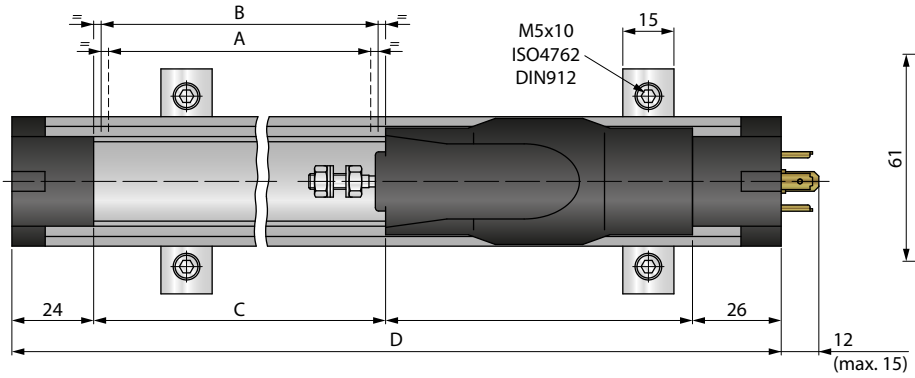


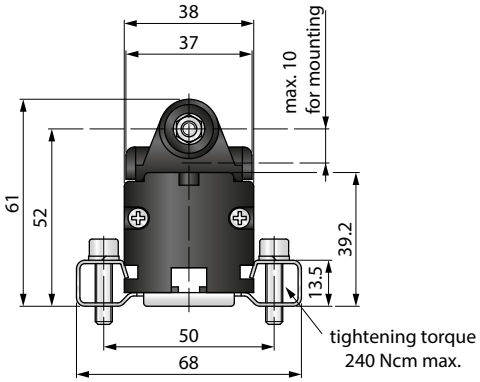


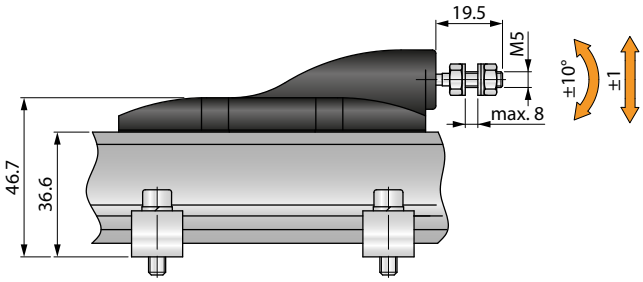


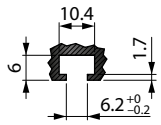


dimensions of
screw head groove

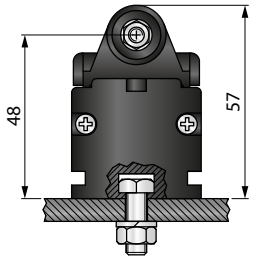


mounting with M6 screw
ISO4017 DIN933

| | | | | | | | | | | | |
|---|---|---|---|---|---|---|---|---|---|---|---|
| **Useful electrical stroke +3/-0** | **A** | 100 | 130 | 150 | 175 | 200 | 225 | 250 | 300 | 400 | 450 |
| **Theoretical electrical stroke ±1** | **B** | 103 | 133 | 153 | 178 | 204 | 229 | 254 | 305 | 406 | 458 |
| **Mechanical stroke** | **C** | 113 | 143 | 163 | 188 | 214 | 239 | 264 | 315 | 416 | 468 |
| **Housing length** | **D** | 253 | 283 | 303 | 328 | 354 | 379 | 404 | 455 | 556 | 608 |

| | | | | | | | | | | |
|---|---|---|---|---|---|---|---|---|---|---|
| **Useful electrical stroke +3/-0** | **A** | 500 | 600 | 750 | 900 | 1000 | 1250 | 1500 | 1750 | 2000 |
| **Theoretical electrical stroke ±1** | **B** | 509 | 611 | 763 | 915 | 1017 | 1271 | 1521 | 1771 | 2021 |
| **Mechanical stroke** | **C** | 519 | 621 | 773 | 925 | 1027 | 1281 | 1531 | 1781 | 2031 |
| **Housing length** | **D** | 659 | 761 | 913 | 1065 | 1167 | 1421 | 1671 | 1921 | 2171 |

## ACCESSORIES

**CON006: mating connector for LSW-M**
for self assembly, IP65, 4 pins,
PG9 cable gland, cable diameter Ø 6...8 mm

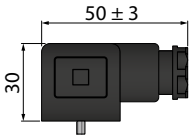


**CON006-M12: mating connector adapter to M12 for LSW-M**

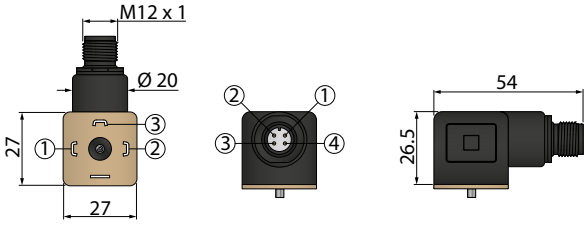


**CON011: mating connector for LSW-B**
for self assembly, IP40, 5 pins, cable diameter Ø 4...6 mm

**Signal conditioner PMX-24**

- Converts potentiometer signals into analog output signals: 4...20 mA, 0...10 V, 0...5 V, ±10 V, ±5 V
- Input: potentiometer 1...20 kΩ
- Configurable output
- DIN-rail-mounting with face-side connector

Photos non contractuelles - Les spécifications peuvent être modifiées sans préavis - wimesure.fr • MB 2021

## ORDER CODE

**LSW – □ – □**

| **Connection** | |
|---|---|
| Connector output, 4 pins | M |
| Connector output, 5 pins | B |

| | **Measurement range [mm]** |
|---|---|
| | see „Technical Data“ |

## ACCESSORIES

| **Mating connector for self assembly** | |
|---|---|
| CON006 | 4 pins, IP65, for LSW-M |
| CON006-M12 | Adapter to M12 for LSW-M |
| CON011 | 5 pins, IP40, for LSW-B |

| **Mounting accessories (included in delivery)** | |
|---|---|
| PKIT059 | for ranges ≤900 mm: 2 brackets + screws |
| PKIT061 | for ranges ≥1000 mm: 3 brackets + screws |

| **Digital displays for sensors with analog output, 2 channel** | |
|---|---|
| WAY-AX-S | touch screen, supply: 18...30 VDC |
| WAY-AX-AC | touch screen, supply: 115...230 VAC |

| **Signal conditioner** | |
|---|---|
| PMX-24 | Output signals: 4...20 mA, 0...10 V, 0...5 V, ±10 V, ±5 V |

Photos non contractuelles - Les spécifications peuvent être modifiées sans préavis - wimesure.fr • MB 2021